Laboratory Exercise 1

For the Bachelor of Science course Digital Circuits.

Introduction

This laboratory exercise serves the purpose of introducing the basic logic components (or gates), from which almost all other digital circuits are built. **Read this document carefully** before coming to the laboratory.

As part of the exercise, it is expected that the findings discovered through the laboratory work be documented in a report (data/calculations/simulations/measurement results/pictures/etc.), where the front-page must contain the course name, date, student names and ID numbers of the group members. When drawing schematics, remember to add all used connection which includes supply (VDD and GND).

Component notes

The following components are given for the exercise.

Logic gates

For this exercise six basic gates are needed: AND-, OR-, NOT-, NAND-, NOR-, and XOR-gate. The gates needed are from Texas Instruments, specifically their SN74HC-series of integrated circuits (IC), that can operate with a supply voltage of 5.0 VDC. The logic gates needed for this exercise are shown in Figure 1, which indeed all look alike, but are very different in functionality. Read the text on their topside to distinguish between them.

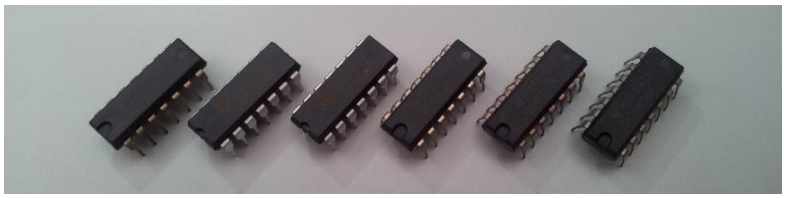

Figure 1. Picture of six basic logic gates from the SN74HC series from Texas Instruments. From the left: SN74HC00N, SN74HC02N, SN74HC04N, SN74HC08N, SN74HC32N, and SN74HC86N.

IMPORTANT, the only way to learn how to connect and use a given component is to find its individual datasheet and read its details. Datasheet are found though online search using the manufacturer's name and the identifying code written on top of the component in question. In this course you are specifically looking for the following parameters and information:

- Pin layout (how to connect to it)
  - Supply pins, both VDD/VCC and GND.
  - Inputs and outputs (keep in mind that these ICs often contains multiple gates).
- Supply voltage level, (every IC must be individually powered to function irrespective of the inputs).
- Description of IC functionality, like truth tables or Boolean expressions for digital parts.

Switches

Switches are an easy way for manually controlling an input but consider whether the switch connects the gate of an input to logic high (the supply rail, here called VDD or VCC) or logic low (supply ground reference, also oftentimes called GND).

IMPORTANT, an unconnected input does NOT equal logical low. Always connect an input to either logical high (VDD) or logical low (GND), either through a switch, wire, or a resistor. Failure to do so almost always leads to unpredictable behavior because the high impedance nature of inputs means they respond to noise and thus might go high, but just as likely might go low, the point is you do not know which it is, so take control of it and avoid the trouble!

A simple solution is to connect a large resistor (>10kΩ) from the input pin to either GND or VDD, thereby ensuring control of the pin when for example the switch is open. An example setup of one switch in an 8-bit dipswitch with pull-down resistor can be seen in Figure 2.

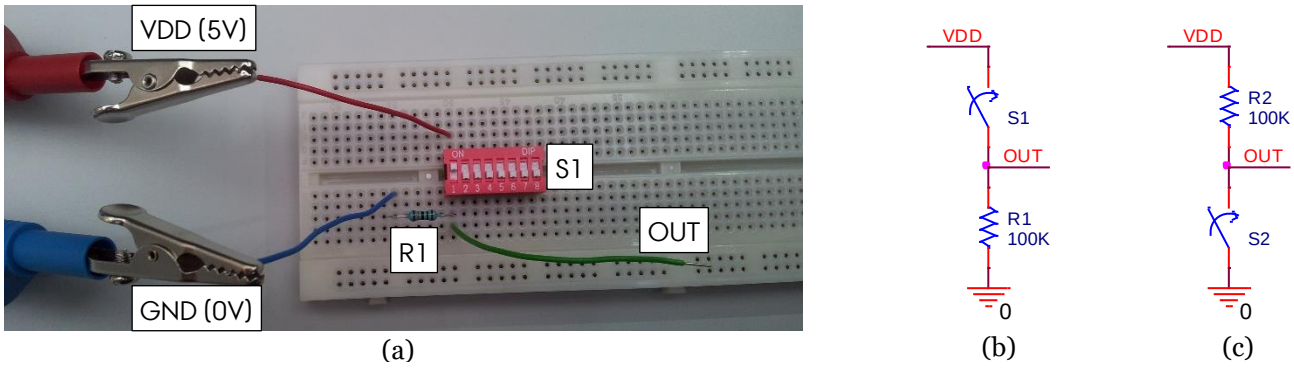

Figure 2. (a) Picture of an 8-bit dipswitch (S1) with a pull-down resistor (R1). (b) Schematical representation of the circuit shown in (a). (c) Shows an alternative setup where the resistor is instead setup as a pull-up resistor. When the switch is open the resistor pulls OUT low for (b), and high for (c).

LED (Light Emitting Diode)

LEDs will in this exercise be used to visualize the output of the logic gates. However, a resistor must be put in series with the LED to limit the current drawn, in order to protect the output of the logic gates. Check the datasheets of the specific gates to find the limits, (look for "Absolute Maximum Ratings" and find something similar to "Continuous output current" and stay within the limit described for it).

IMPORTANT, the polarity of the LED matters! LEDs must be forward biased as it is called, where the Anode is the positive pin, and the Cathode is the negative pin. An example setup of an LED in series with a 300 Ω resistor can be seen in Figure 3.

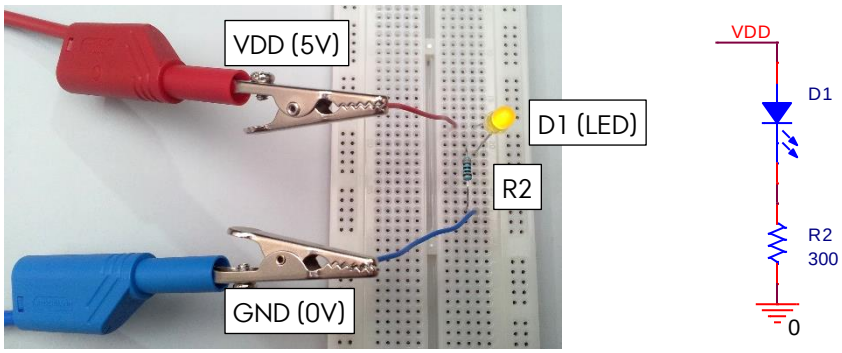

(a) (b)

Figure 3. (a) Picture of a yellow 5mm LED in series with a 300Ω resistor driven by 5.0 VDC (red wire), with respect to ground reference (blue wire). (b) Shows the schematic equivalent circuit, with VDD representing the supply voltage.

Full Implementation Example

Shown here in Figure 4 is an example of a fully implemented test setup with an AND-gate, showing both the schematic of what has been build, end how it looks when implemented on a breadboard. Note that a 100 nF capacitor (C1) has been placed over the supplies of the AND-gate. This is standard practice and helps stabilize the IC power supply and helps to prevent sensitivity to noise.

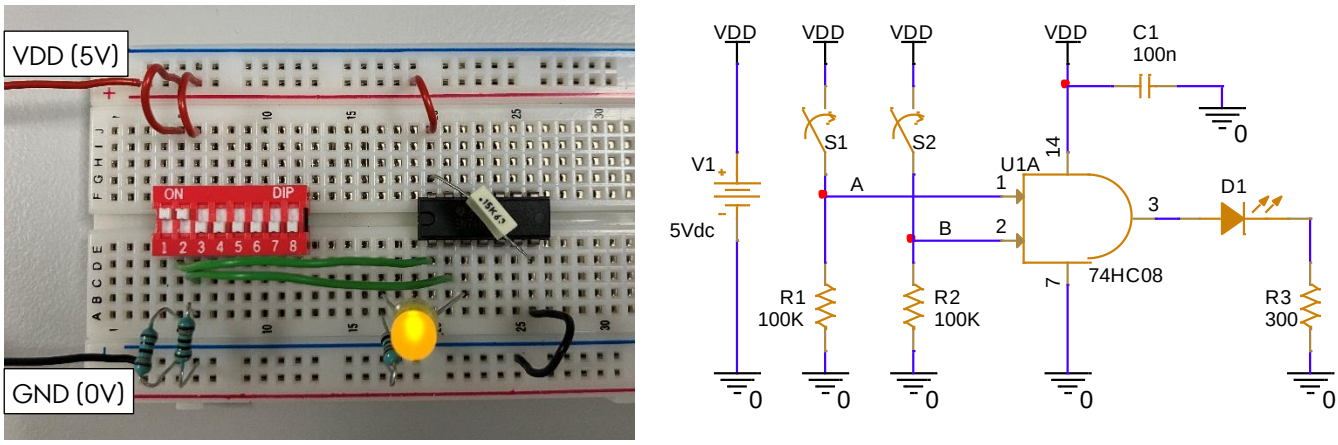

(a) (b)

Figure 4. (a) Implementation of an AND-gate test setup. (b) Schematic representation of the AND-gate (74HC08) test setup, including supply, switches, and an LED to indicate the output visually.

Exercise Tasks

Test and experiment with each of the following six gates: AND, OR, NOT, NAND, NOR, and XOR, (2-input gates, except for the NOT-gate which of course is 1-input). For each gate, document in the report the device name, its respective symbol, draw a schematic of your test circuit (for each individual gate), fill in its truth-table and confirm the experimental results against the respective component datasheet and simulations.

The deadline for hand in of the report can be seen on Bright Space, where you also upload your report.